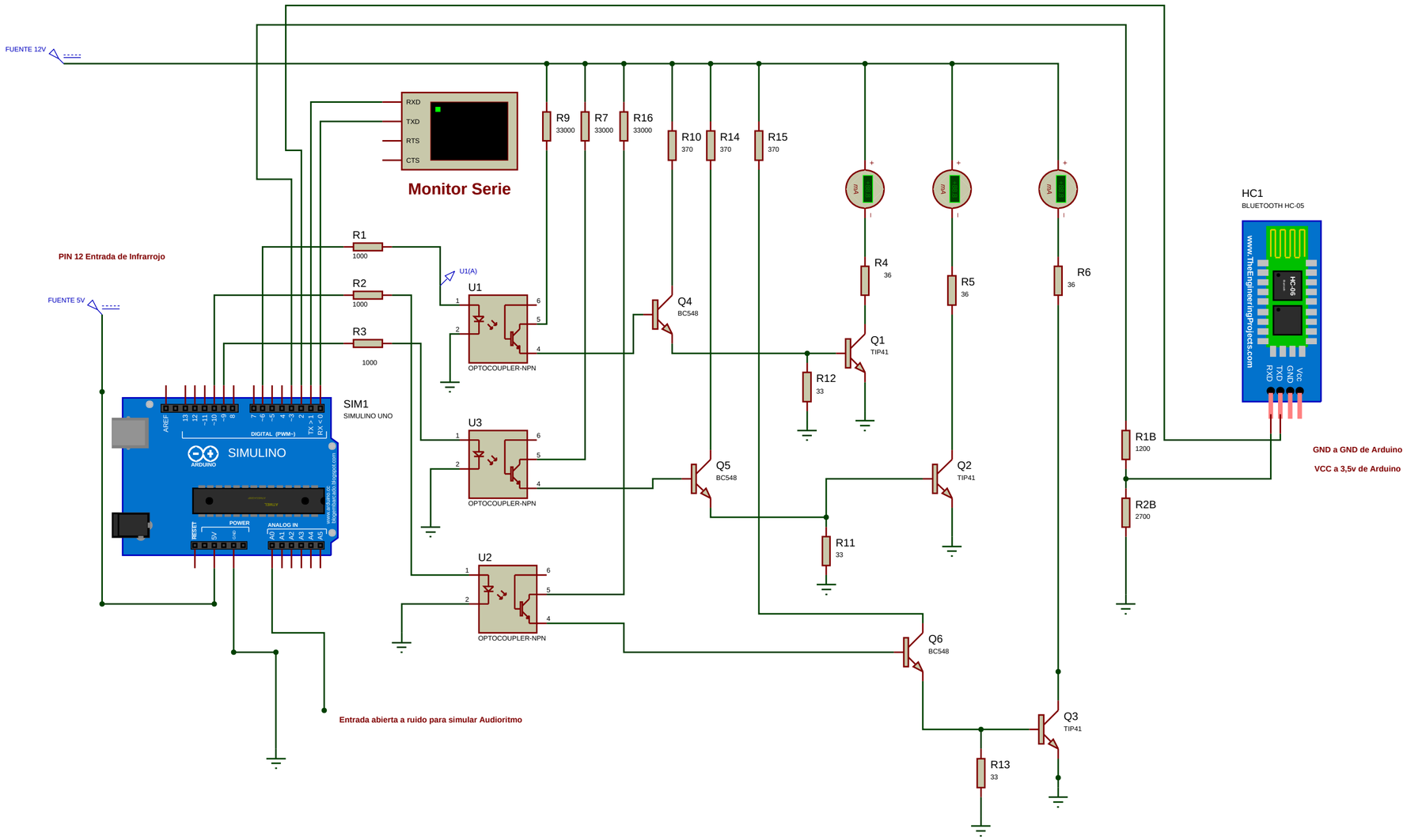Control Tiras LEDs RGB 2018