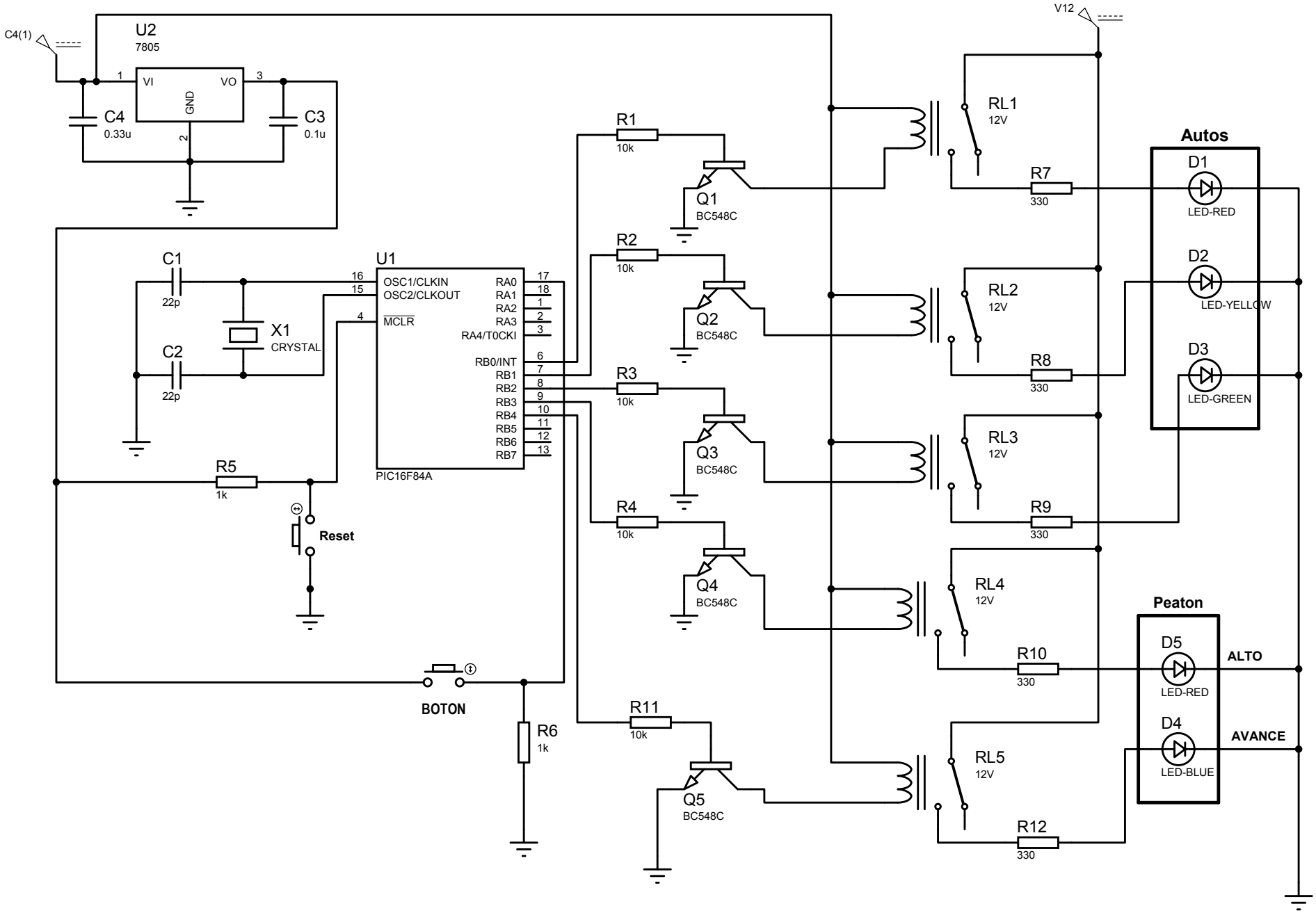
C4(1)
U2
7805
VI
VO
GND
C4
0.33u
C3
0.1u
V12
C1
22p
C2
22p
X1
CRYSTAL
U1
OSC1/CLKIN
OSC2/CLKOUT
MCLR
RA0
RA1
RA2
RA3
RA4/T0CKI
RB0/INT
RB1
RB2
RB3
RB4
RB5
RB6
RB7
PIC16F84A
R5
1k
Reset
BOTON
R6
1k
R1
10k
R2
10k
R3
10k
R4
10k
R11
10k
Q1
BC548C
Q2
BC548C
Q3
BC548C
Q4
BC548C
Q5
BC548C
RL1
12V
RL2
12V
RL3
12V
RL4
12V
RL5
12V
R7
330
R8
330
R9
330
R10
330
R12
330
Autos
D1
LED-RED
D2
LED-YELLOW
D3
LED-GREEN
Peaton
D5
LED-RED
D4
LED-BLUE
ALTO
AVANCE